Realization of algorithms for video signal processing using System-on-a-Chip

Reporter:
Sergii Bondariev

Supervisor of studies:
prof. Lysenko O.M.

© TemplatesWise.com

Urgency

- SoC = low-cost solution for complex video algorithms
- Algorithms with reduced resource usage

Objectives

- Realization of median filter in SoC

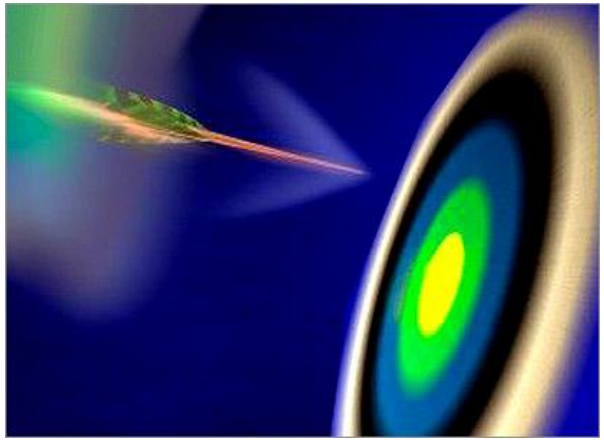

- Realization of edge detector in SoC

Problems solved to meet objectives

- Analysis of methods and means of real-time video processing
- Justification of platform choice for video system realization
- Development of the video processing system
- Algorithm model synthesis

Subject of inquiry

Digital signal processing

Subject of investigation

Methods and means of realization of video processing algorithms in SoC

Investigation methods

Mathematical modeling, filtration, edge detection

ANALYSIS OF METHODS AND MEANS OF REAL-TIME VIDEO PROCESSING

- What is real-time?
- Algorithm simplification strategies
- Hardware platforms for video processing

Algorithms for PC

$\neq$

Algorithms for SoC

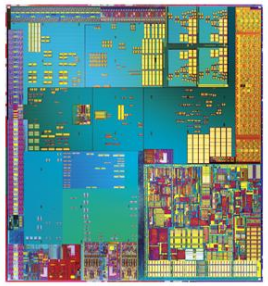

Platform choice – Altera DE2

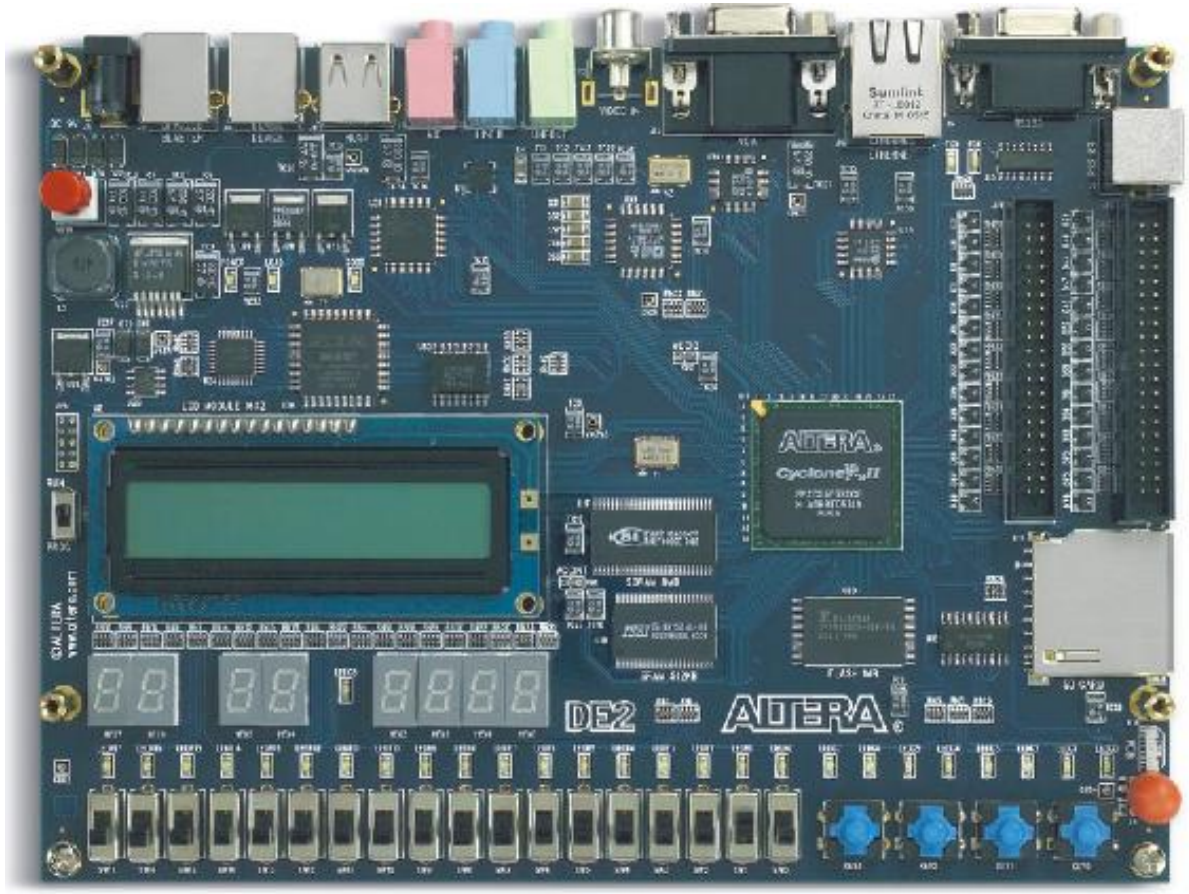

Core

- FPGA Cyclone II

I/O

- USB blaster
- VGA 10-bit DAC
- NTSC/PAL decoder

Memory

- SRAM 512 KB
- SDRAM 8 MB
- Flash 4 MB
- SD slot

Oscilloscopes

- 27 MHz
- 50 MHz

HARDWARE PART OF THE VIDEO PROCESSING SYSTEM

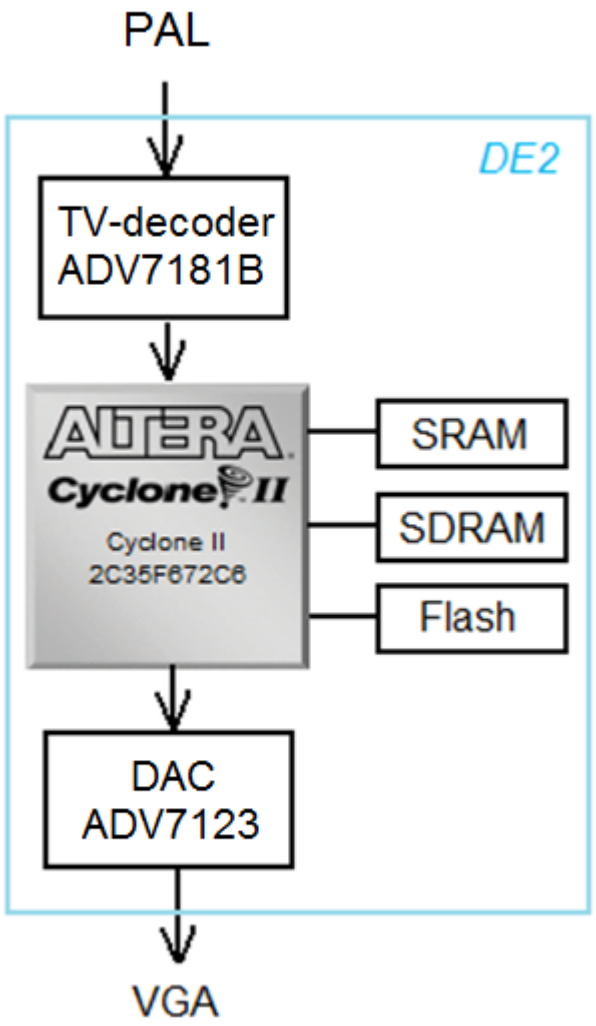

1. **TV – decoder ADV7181B**

   PAL analog signal conversion to digital (BT.656)

2. **Cyclone II**

   Digital signal processing

3. **DAC ADV7123**

   Digital RGB into analog RGB conversion

Video processing chain

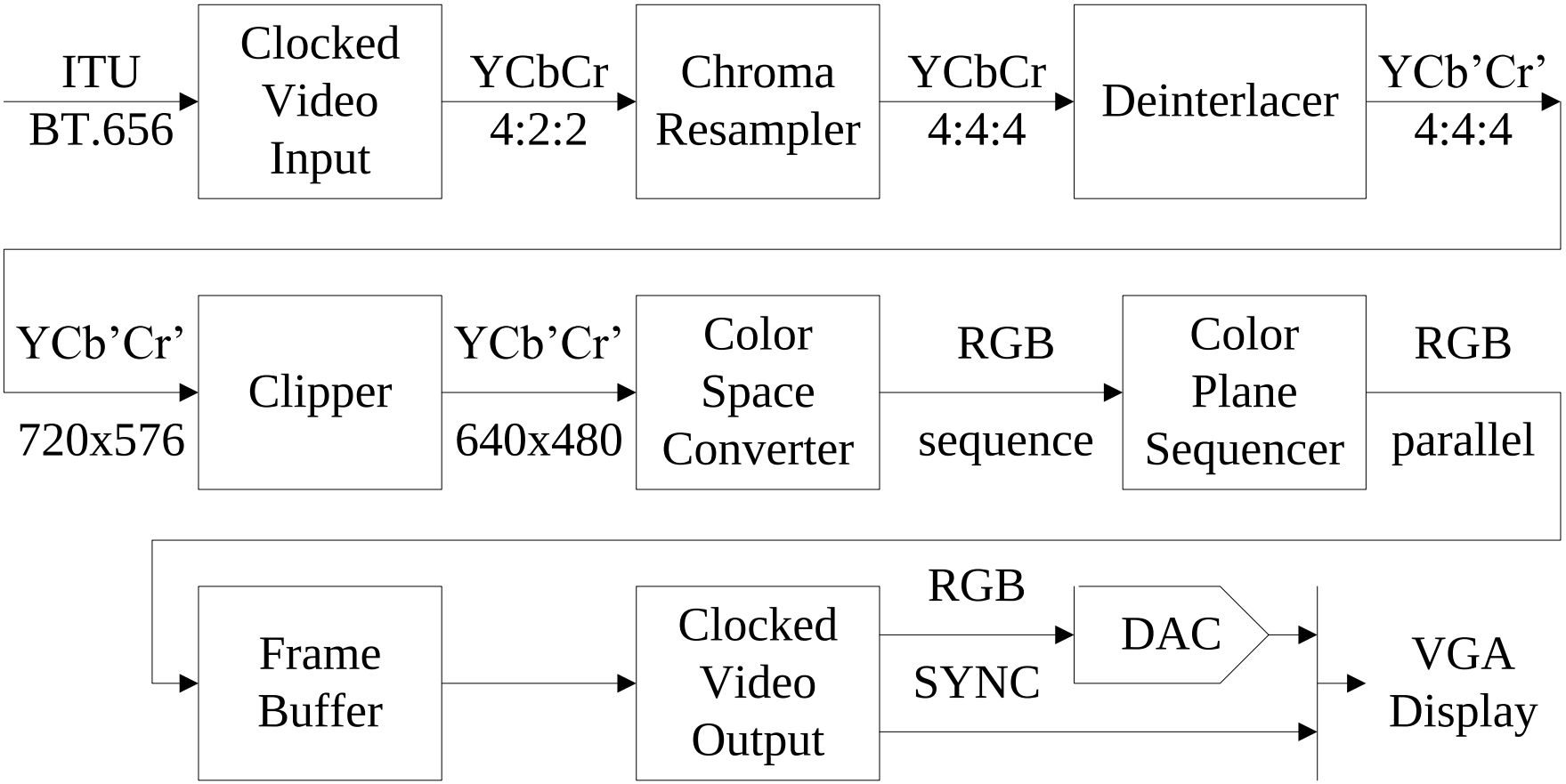

TEST BENCH FOR ALGORITHM MODELING

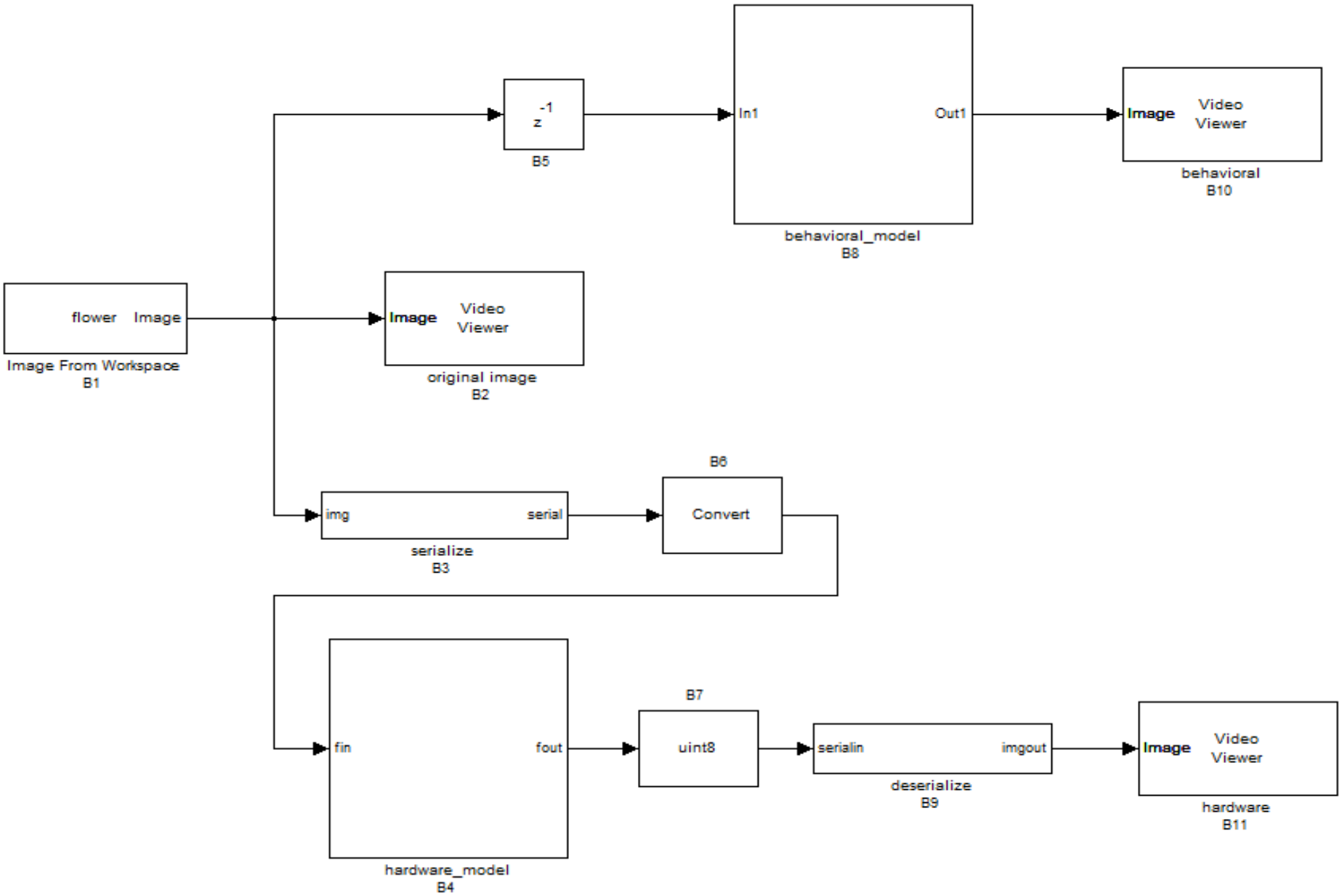

SIMULATION RESULTS

	Median Filter	Edge detector
Input		
Output		

EXPERIMENTAL RESULTS

Median Filter

Edge detector

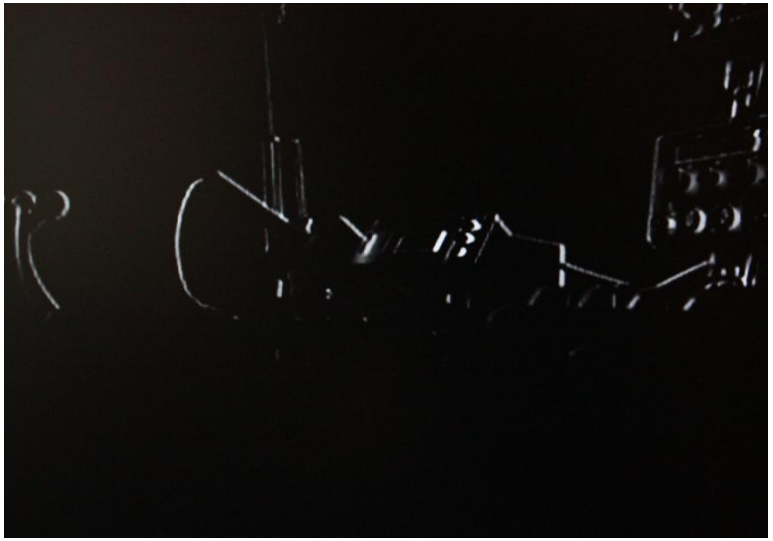

Scientific Novelty

Resource usage reduction

- Median Filter – 8 times less than megafunction “Median Filter 2D”, supplied by Altera
- Edge Detector – 6 times less than megafunction “FIR Filter 2D”, supplied by Altera

	MEDIAN FILTER 2D Altera Megafunction	Developed Median Filter	*FIR FILTER 2D* Altera Megafunction	Developed Edge Detector
Total logic elements	1709	215	1257	207
Total combinational functions	1561	196	911	172
Dedicated logic registers	1138	75	919	88
Total registers	1138	75	919	88
Total memory bits	5120	5056	5120	5056

Practical importance

- Development of the algorithms and program decisions for embedded system
- Creation of the working SoC prototype for video processing

Conclusion

- Methods and means of real-time video processing were analyzed
- Platform choice for video system realization was done
- Development of the video processing system was conducted
- Algorithms models were designed and synthesized into the hardware

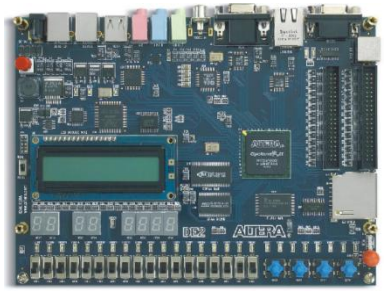

Approbation

Reports for the scientific and technical conferences

ELECTRONICS-2009

SAIT-2009

Thank you for attention!

Please, put your questions

© TemplatesWise.com